Development of a Low-Power Read-Out System Using CMOS ASICs for a μ-PIC.

Satoru Iwaki, T. Tanimori, H. Kubo, K. Miuchi, A. Takada, J. D. Parker, T. Mizumoto, S. Kabuki, Y. Kishimoto, K. Ueno, S. Kurosawa, T. Sawano, K. Nakamura, Y. Matsuoka, S. Komura, Y. Sato, M. Tanaka[2], M. Ikeno[2], T. Uchida[2], and Open Source Consortium of Instrumentation.

1.Cosmic-Ray Group, Dept. of Physics, Kyoto Univ.

2.*IPNS, KEK*

* e-mail address: iwaki@cr.scphys.kyoto-u.ac.jp

Abstract : For astronomical observations, we have been developing an Electron Tracking Compton Camera (ETCC) based on a gaseous time projection chamber (μ-TPC) with a micro pixel gaseous chamber (μ-PIC), and scintillation cameras. With this camera, we have the balloon born experiment named SMILE. In a balloon-borne experiment, the space and power consumption are seriously restricted by capacity of batteries.

We have developed low power CMOS Front-End ASIC for a μ-PIC in a collaboration with KEK. The ASIC chip, named FE2009bal, integrated 16 channels of a charge sensitive front-end amplifier, a shaper, and a discriminator has been designed and fabricated with the TSMC 0.5 μm process. The power consumption of the chip is about 18mW/ch.

The readout board based on the ASIC has also been developed. This board is implemented of 8 FE2009bal chips and Xilinx FPGA, and processes 128 analog signals from the μ-PIC. The total power consumption of the readout board is about 66W for a (30cm)^2 μ-PIC (1536 strips).

1, Our Detector ~ Electron Tracking Compton Camera ~

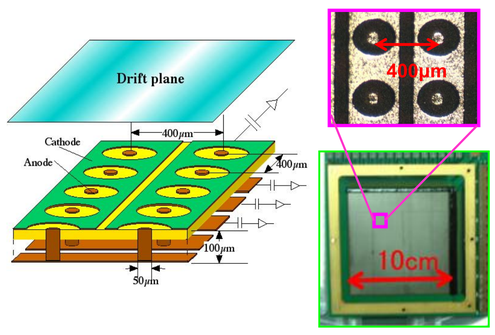

Schematic view of the μ-PIC (left) photographs of 10cm^{2}μ-PIC, (bottom right) and its microphotograph (upper right).

For the sub MeV to MeV gamma-ray observation in astronomy, we have been developing an Electron Tracking Compton Camera (ETCC). The Camera consists of a gaseous time projection chamber (μ-TPC) [1] with μ-PIC [2][3], which detects the 3D-track and the energy of the recoil electron, and a scintillation camera, which detects the absorption point and the energy of the scattered gamma ray. By using these four pieces of information, we can completely reconstruct the Compton scattering event by event, and obtain a fully ray-traced gamma-ray image[1].

With this camera, we have planned the balloon experiments named SMILE (Sub-MeV gamma-ray Imaging Loaded-on-balloon Experiment).

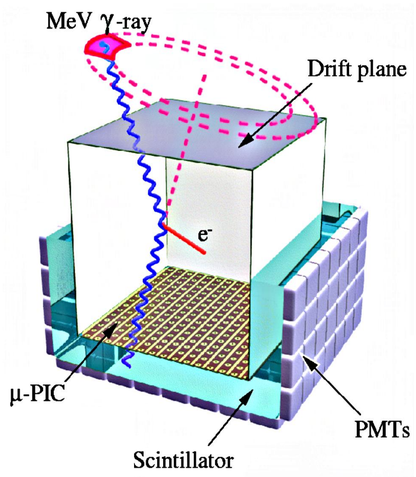

Schematic view of the ETCC.

Photograph of SMILE

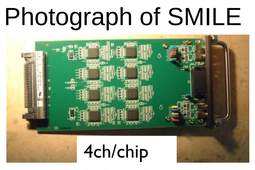

ATLAS TGC ASD 64ch board

(10cm)^3 ETCC @Sanriku, JPN (2006)

SMILE- Ⅰ [4]
- ❒Operation test of ETCC @ 35km
- ❒Measurement of Diffuse cosmic and atmospheric gamma rays
- ❒512ch readout : ~70W
- ❒ATLAS TGC ASD[5] (Bipolar Process) : 59mW/ch

(30cm)^3 ETCC (2012~) SMILE- Ⅱ
- ❒Observation of Crab or Cyg X-1
- ❒1500ch readout
- ❒80W for μ-TPC Read-out

(40cm)^3 ETCC
- ❒Super pressure balloon～10days
- ❒4000ch readout

Roadmap of the SMILE

In a balloon-borne experiment the power consumption and space is seriously restricted. Thus we need low-power and fast readout system.

Requirement to new Readout System
- Low power Consumption. (less than 80W for a (30cm)^2 μ-PIC)
- Small size and high integration.
- Input dynamic range : -1pC ~ 1pC
- ENC<6000 e⁻ @ Cd = 100pF

2, New ASIC Chip : FE2009bal

We have developed CMOS ASIC for μ-TPC with KEK to improve the power consumption. We designed new ASIC chip "FE2009bal" using SPICE simulator. The chip is fabricated with "TSMC 0.5μm CMOS process" . The chip contains 16 channels in a LQFP100-pin package. In this chip, the power consumption is reduced to 18mW/ch, and other parameters are all satisfy our requirement.

Specification of FE2009bal
- TSMC 0.5μm CMOS process.
- Preamplifier with a gain of 0.6V/pC.
- 16ch sum amp with a gain of 0.8V/pC.
- Comparator with CMOS 2.5V output.
- 6bit DAC for calibrate channel variety.
- ENC ~6000 e⁻ at Cd = 100pF.
- Required voltage +/-2.5V,GND.
- 16 channels in 1 chip.
- Power Consumption : 18mW/ch.

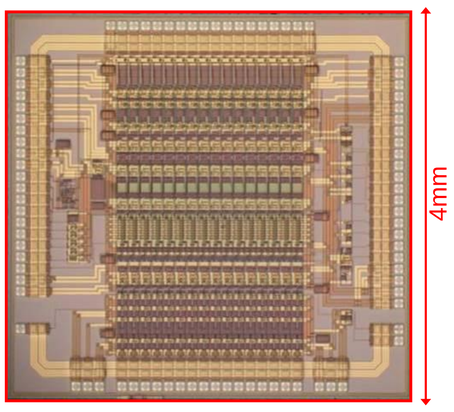

Microphotograph of the FE2009bal.

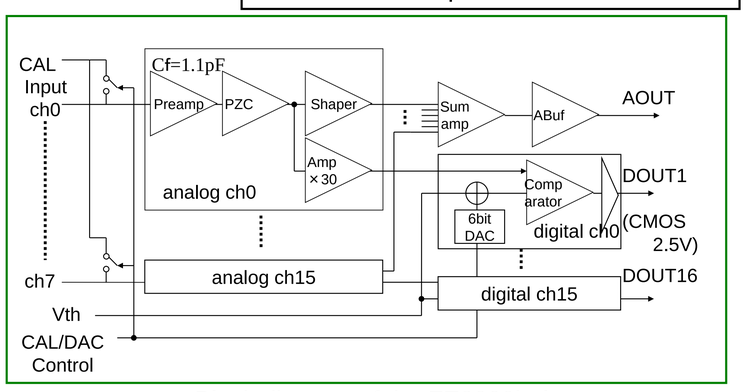

Block diagram of the FE2009bal

SPICE Simulation

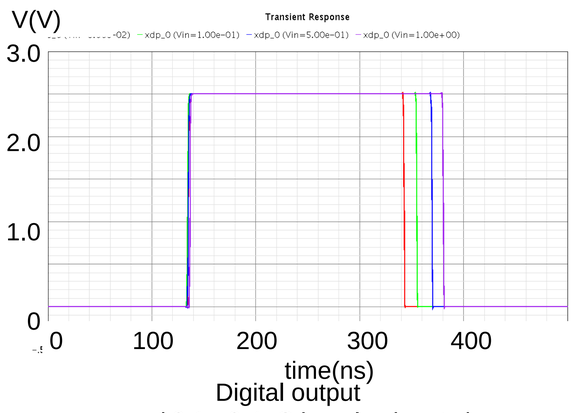

Digital output
(0.1~ 0.4pC impulse inputs)

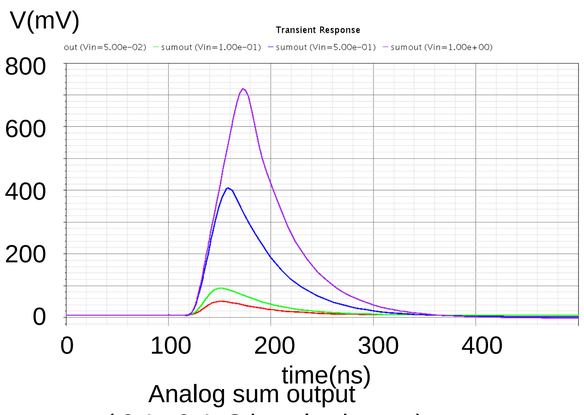

Analog sum output
(0.1~ 0.4pC impulse inputs)

3, FE2009bal Chip Test with μ-PIC

We took signals from the 10cm^3 μ-TPC using test boards with 8 FE2009bal chips. We have successfully measured spectrum of X-ray from ^{109}Cd source, and got tracks of cosmic-ray muons.

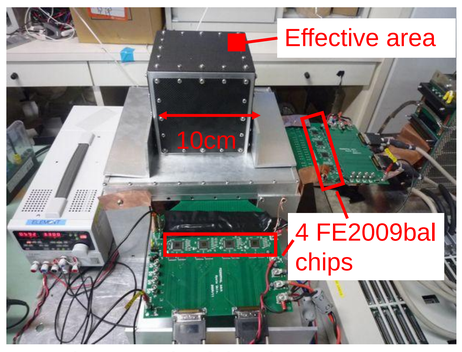

Photograph of the detector setup.

Detector Status
- (10cm)^2 μ-PIC
- μ-PIC Anode : 430V
- ΔGEM = 400V (P140-φ70-100t LCP)
- Effectine Volume : 2.5cm×2.5cm×15cm
- Gas : Ar 90% + C_2H_6 10% 1atm (sealed)
- Stable gas gain : ~40000

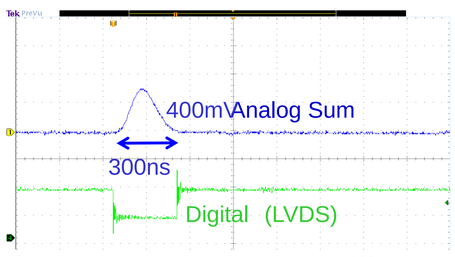

Measured signal from μ-PIC (^{109}Cd source).

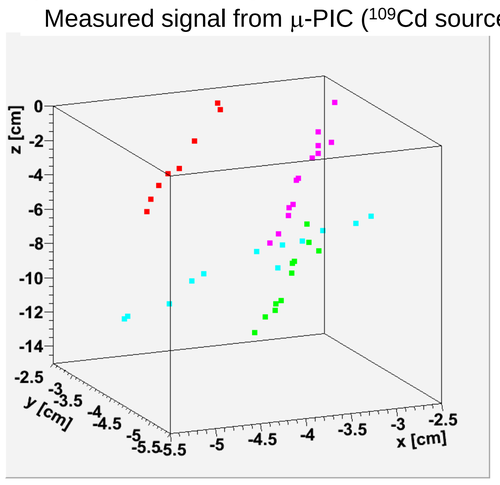

Observed tracks of cosmic-ray muons.

4, Readout Board Based on FE2009bal

The new readout board based on FE2009bal chips has also been developed. This board processes 128 analog signals from the μ-PIC. An FPGA is also employed to process digital signal from ASICs and ADCs. The hit patterns, clocks, and wave forms of tracks are calculated in FPGA and sent to a VME memory board. The total power consumption of this readout board is about 66W for a (30cm)^2 μ-PIC.

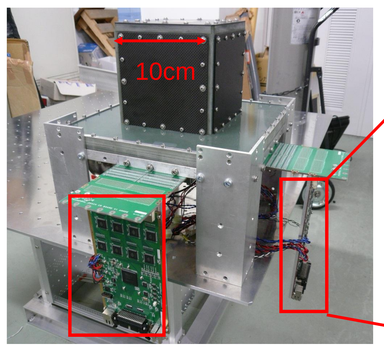

Photograph of the detector setup

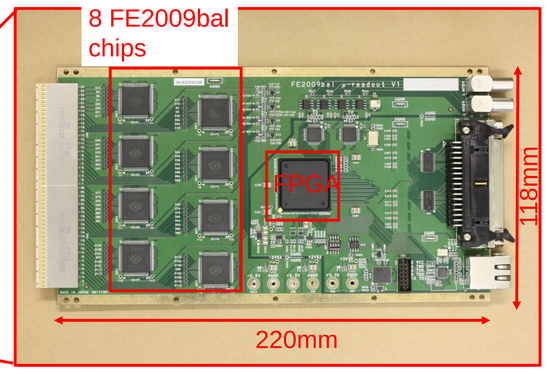

Photograph of the readout board.

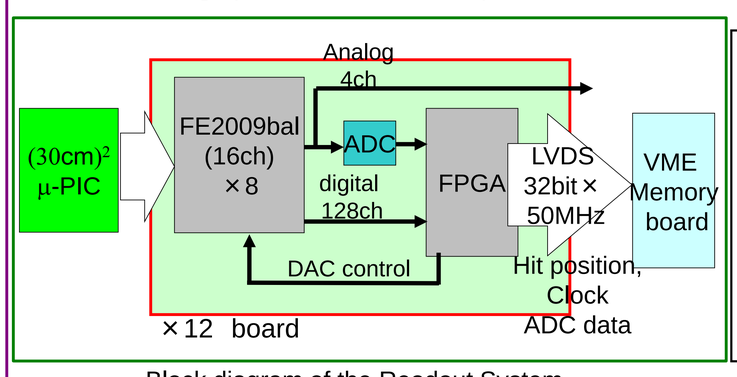

Block diagram of the Readout System

Specification of Readout Board
- 8 FE2009bal chips (128ch).
- 32ch sum analog signal output.
- 10bit 100MHz ADC ×4.
- FPGA : Xilinx Spartan6 (XC6SLX100-2FGG676C) .
- Parallel LVDS output 50MHz, 32bit (1.6Gbps).
- ±2.5V and +3.3V are required.
- Power Consumption : ~5.5W/board.

Now testing!!

6, Future Works

- Measuring MIP(Minimum Ionizing Particle) track using new readout board.
- Electron tracking Compton imaging test with scintillation camera.
- Optimization of FPGA Logic.
  - Measure the direction of Compton-recoil electron more precisely.
  - Decrease dead time.
- Install to Flight model.

References

[1] H.Kubo *et al.*, Nucl.Instr.Meth.,A513(2003)94.
[2] A.Ochi *et al.*, Nucl.Instr.Meth.,A471(2001)264.
[3] A.Ochi *et al.*, Nucl.Instr.Meth.,A478(2002)196.
[4] A. Takada *et al.* ApJ 733 (2011) 13
[5] O.Sasaki and M.Yoshida,IEEE Trans.Nucl.Sci.,46(1999).